CARTRIDGE CAVITIES

FJ-03
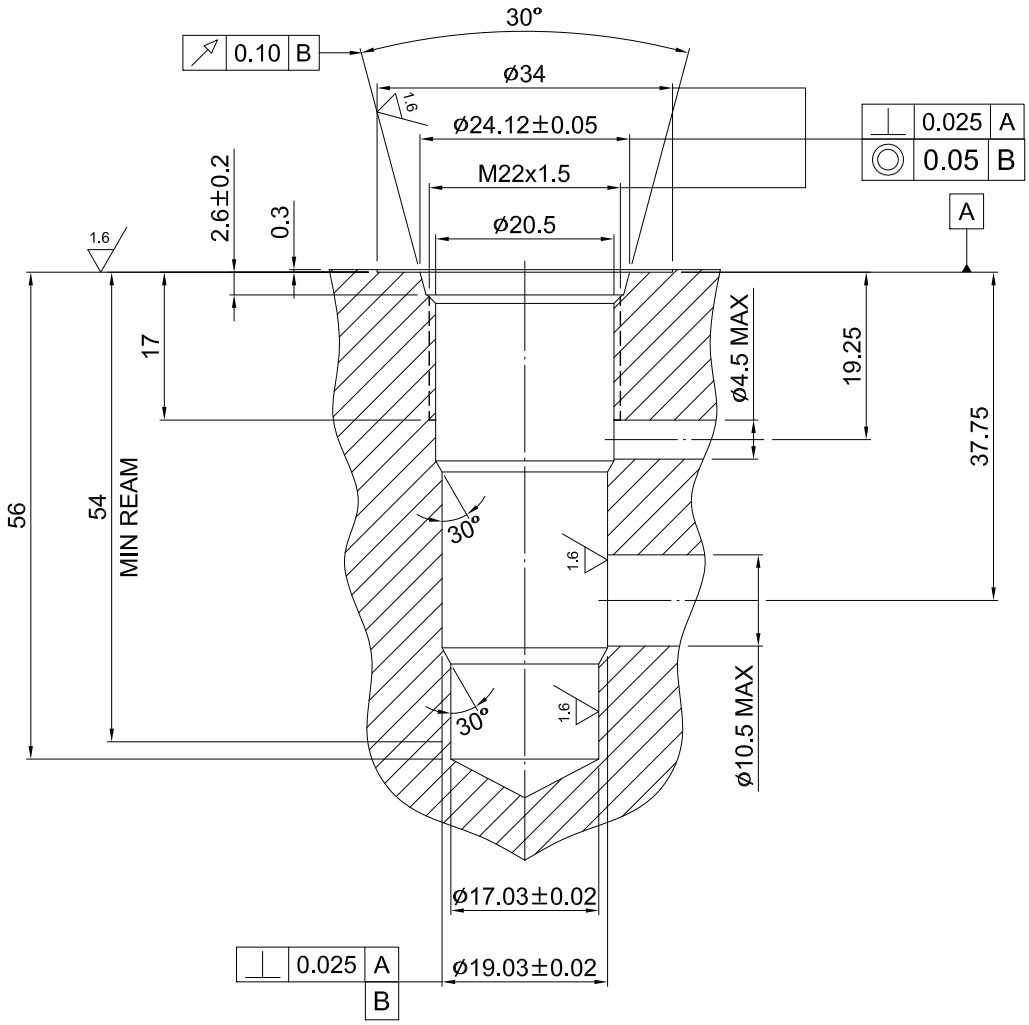
DIMENSIONS (mm)